Blinds by Post

Cassette Roller Blind Specification

SYSTEM 40® ROLLER SYSTEM
WITH THE 70mm FULL FASCIA CASSETTE

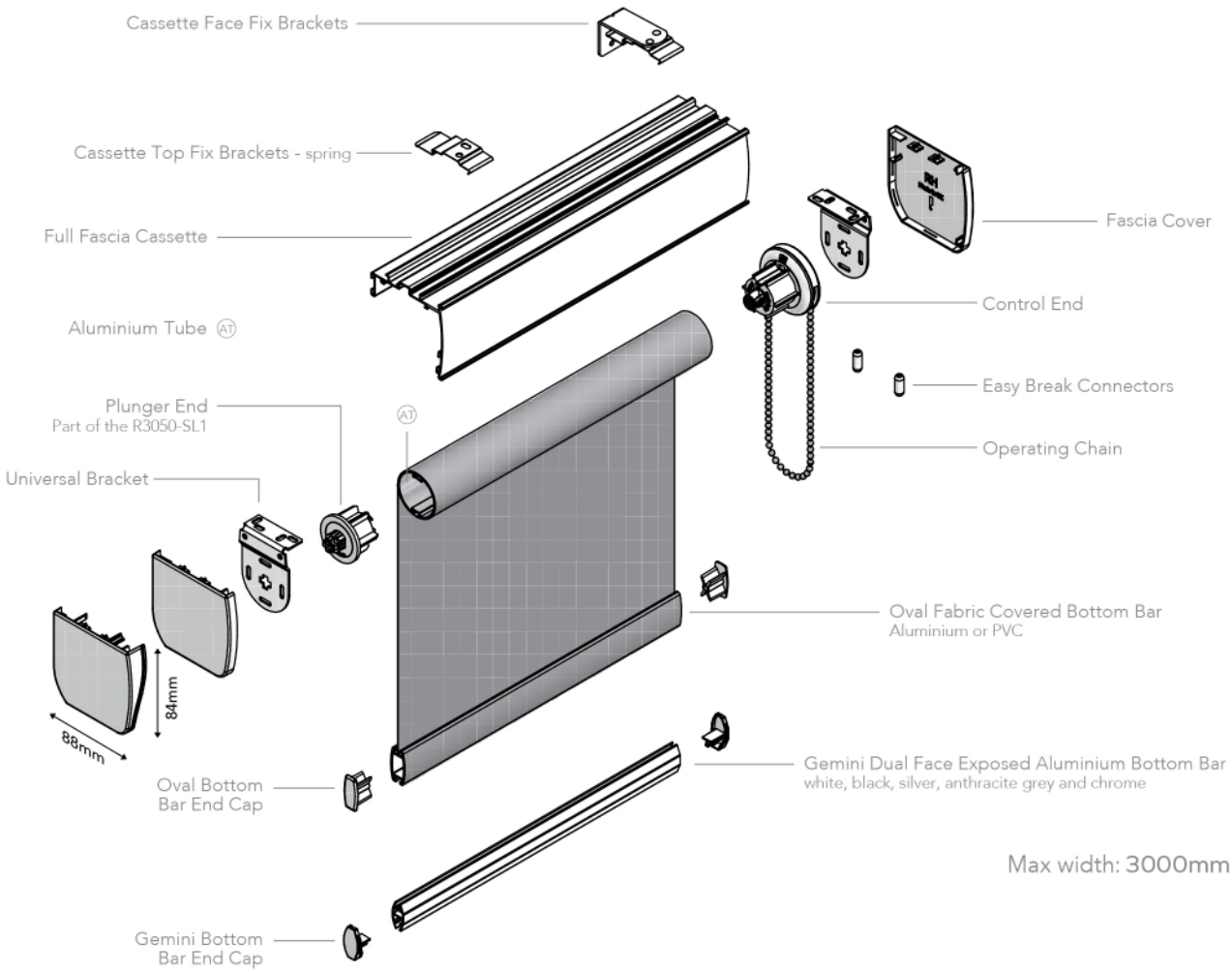

Max width: 3000mm

SYSTEM 40® 70MM FASCIA BRACKET DIMENSIONS

A. 40® standard metal bracket top fix & 70mm cover

B. 40® standard metal bracket top fix front view

