Blinds by Post

How to Measure for Replacement Vertical Blind Slats

MEASURING INSTRUCTIONS

What you'll need:

Tape Measure

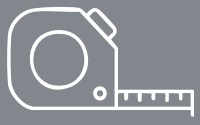

Pencil



Paper



Phone or tablet



STEP 1

Unclip the slat from your headrail.

Please note: You'll notice our slats come with double slated top hanger, this allows you to raise the slats by 5mm if needed.

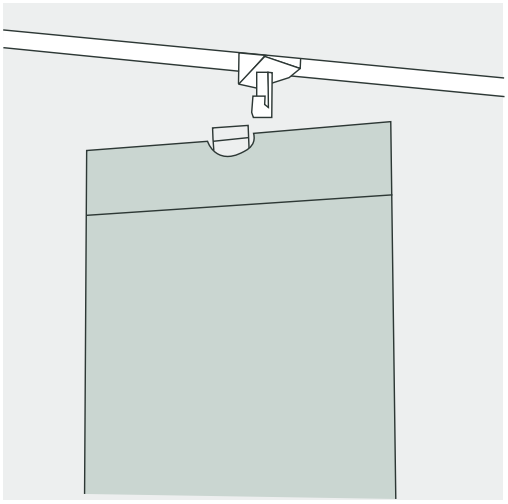

STEP 2

Lay your slat on a clean flat surface. Measure the drop of the fabric **DO NOT** include the top hanger in this measurement!

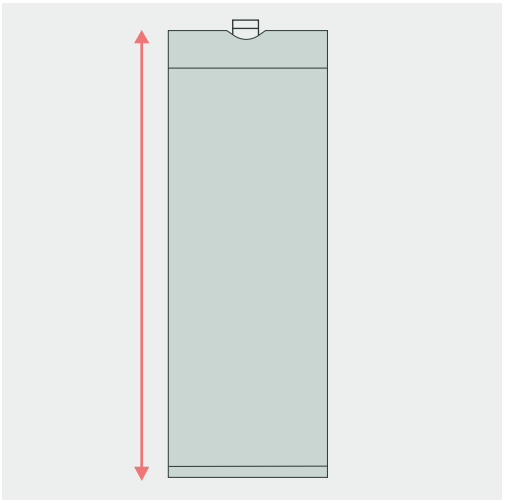

MEASURING INSTRUCTIONS

STEP 3

Count the number of runners in your headrail to determine the amount of slats to order.

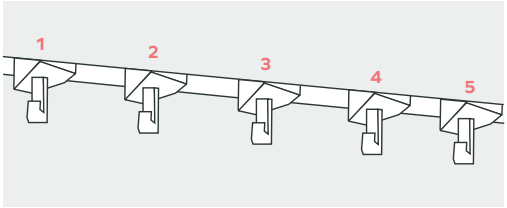

STEP 4

Enter the drop measurement into our website and select your chain option.

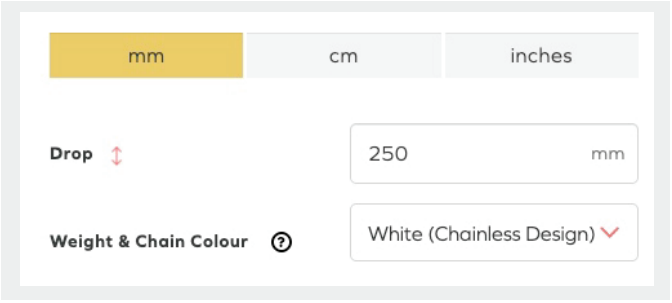

You're all done!

Pop your measurements into our website and add to your basket to order your new Replacement Vertical Blind Slats.

Still need advice? Call our friendly customer service team on **01274 214466** or visit our website **www.blindsbypost.co.uk** & use our live chat.