Blinds by Post

Vertical Blinds
Installation & Operation Instructions

FITTING INSTRUCTIONS 1/3

You should have:

Blind parts	Tools
Brackets 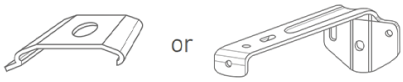 Safety device 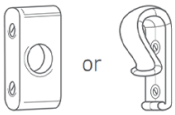	Screw driver  Drill  Tape measure 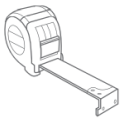 Pencil 

STEP 1

The installation of this product should be conducted by someone competent in DIY.

Outside Recess
If the blind is to be fitted outside the window ensure that measurement C is the same. Follow instructions for FACE FIXING. To calculate C=(A-B)/2.

Inside Recess
TOP FIX to the lintel or FACE FIX brackets to the window frame.

Children can strangle if a safety device is not installed. Always use a safety device to keep cords and chains out of reach of children.

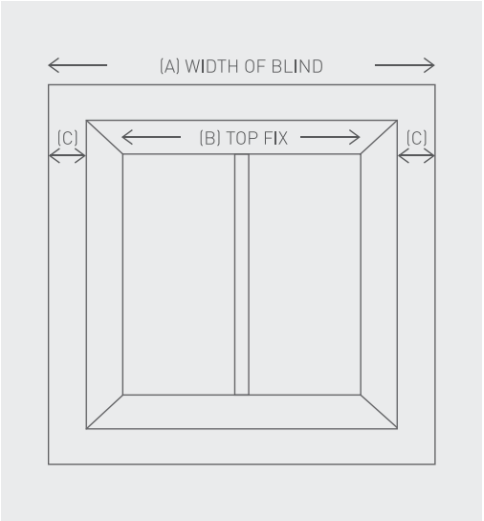

STEP 2

Top Fixing
Measue and mark the distance (D), allowing for obstructions like handles that protrude into the recess area. Position brackets approx 5cm from the ends of where the headrail is to be positioned. If more than 2 brackets are supplied, fit the additional brackets at equal spacing across the length of the blind. Please ensure fixings are suitable for the wall/surface to which you are mounting the brackets.

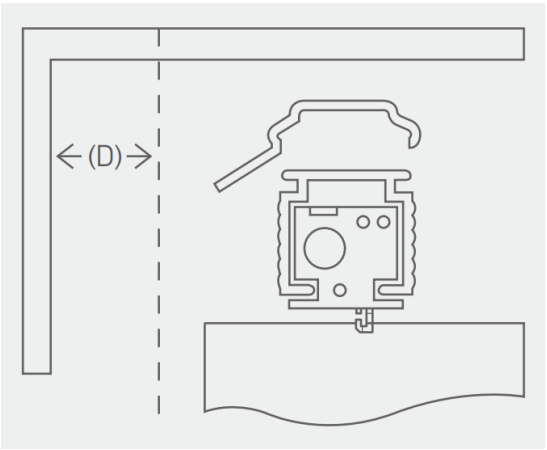

Face Fixing
Position brackets approx 5cm from the ends of where the headrail is to be positioned. If more than 2 brackets are supplied, fit the additional brackets at equal spacing across the length of the blind. Please ensure fixings are suitable for the wall/surface to which you are mounting the brackets.

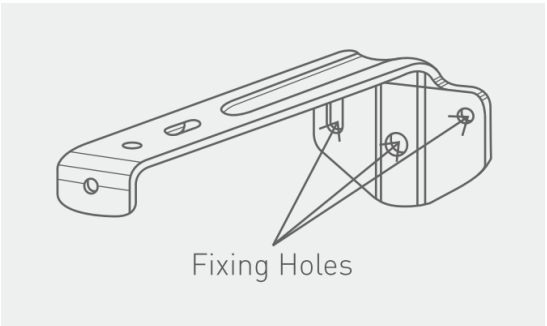

FITTING INSTRUCTIONS 2/3

STEP 3

Top Fixing
Tilt and hook headrail into bracket at point (E). Rotate the headrail into position until it clicks. To release the headrail push the bracket at point (F).

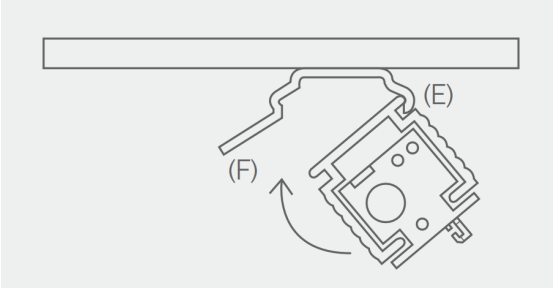

Face Fixing
Hook the back of the headrail into the bracket and rotate the headrail into position. Secure headrail by tightening the short screw in the front of the bracket.

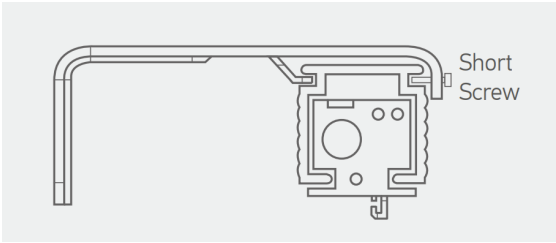

STEP 4

Safety Device
The safety device must be installed at the maximum distance possible from the control mechanism to prevent looped chain becoming slack.

Place the safety device on the wall and mark the positioning of the 2 screw holes.

Drill holes using a suitable drill bit. Place device into position ensuring the chain is fully taut.

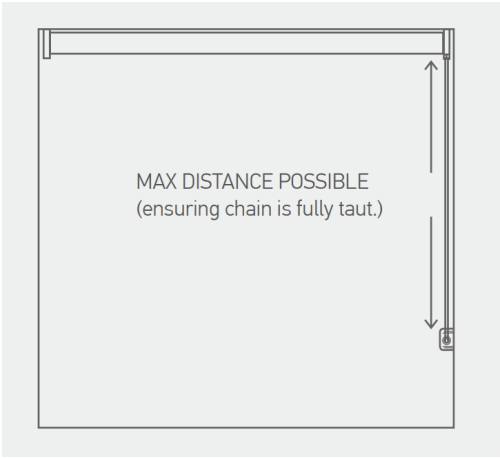

STEP 5

Retaining Device
The safety device must be installed at the maximum distance possible from the control mechanism to prevent looped chain becoming slack.

Place the safety device on the wall and mark the positioning of the 2 screw holes.

Drill holes using a suitable drill bit. Place device into position ensuring the chain is fully taut.

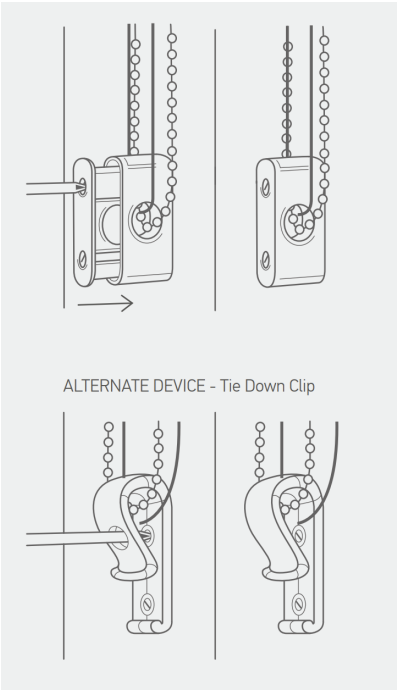

FITTING INSTRUCTIONS 3/3

STEP 6

Attaching A Vertical Vane
With the headrail fitted, hook each fabric/PVC slat into the headrail travellers ensuring the traveller pegs are in the open position.

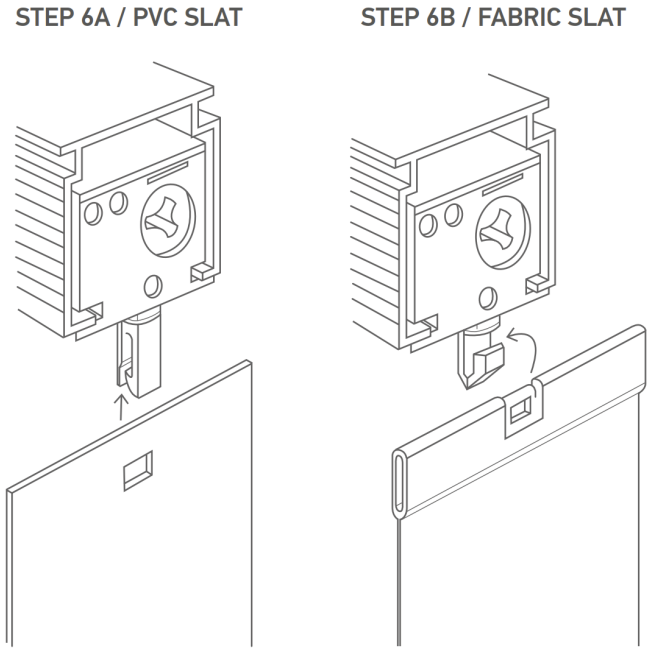

STEP 6

Bottom Weights
Insert the bottom weights into the bottom pockets on each vertical vane.

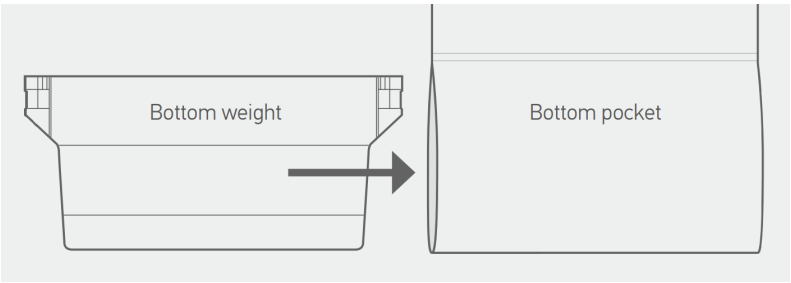

Stabilising Chain
Push connector on stabilising chain onto the ear of each bottom weight. Stabilising chain will need to be connected to both sides of the blind.

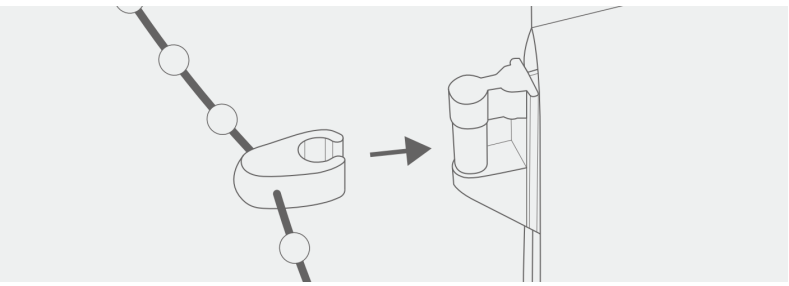

OPERATION INSTRUCTIONS

PLEASE READ THE INSTRUCTIONS BEFORE OPERATING THIS PRODUCT

WAND OPERATION-DRAW

Use the wand to draw the slats to either end of the blind.

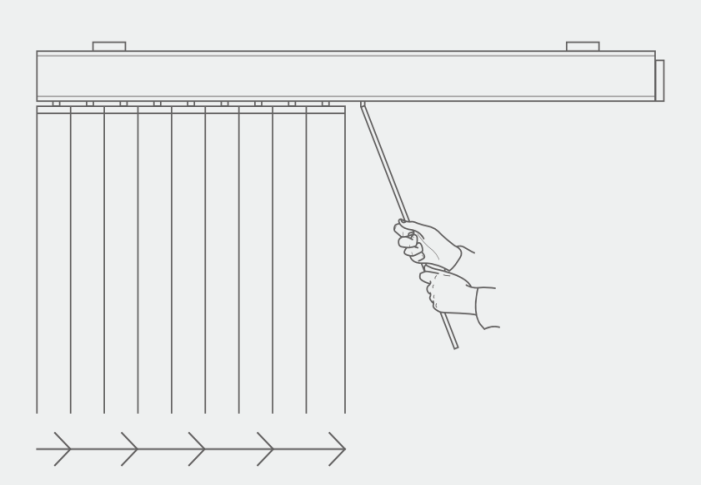

WAND OPERATION-TILT

Twist the wand to tilt the slats in either direction to the open/closed position.

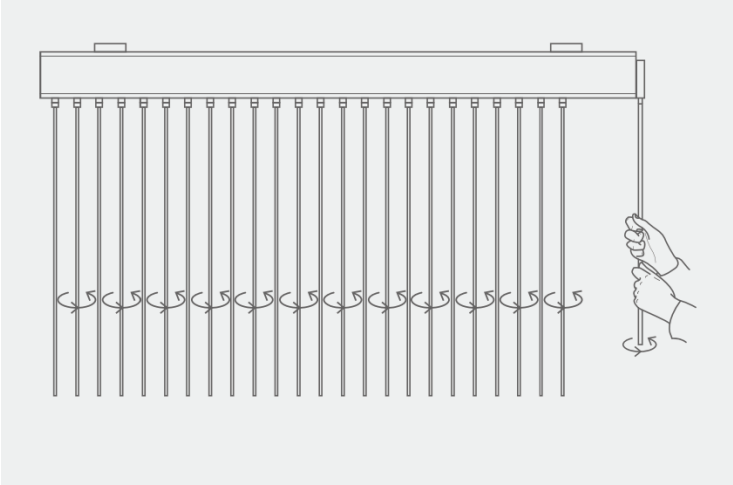

If any of the slats are out of alignment, twist the wand control until the slats are in the closed position, then continue to twist the wand until all the slats are fully aligned.

You may feel some resistance and hear a clicking noise whilst doing so.

MAINTENANCE

The product is low maintenance, however we recommend that regular visual checks are completed to ensure that no components have been damaged, which could result in operating difficulties and/or cause a safety risk.

To ensure the slats slide smoothly across the headrail apply some silicone base lubricant spray to inside of the headrail. If any maintenance is required we recommend that the work is carried out immediately by a reputable blind company.

WARNING

Young children can be strangled by loops in pull cords, chains, tapes and inner cords that operate the product.

To avoid strangulation and entanglement, keep cords out of the reach of young children. Cords may become wrapped around a child's neck. Move beds, cots and furniture away from window covering cords.

Do not tie cords together. Make sure cords do not twist and create a loop.

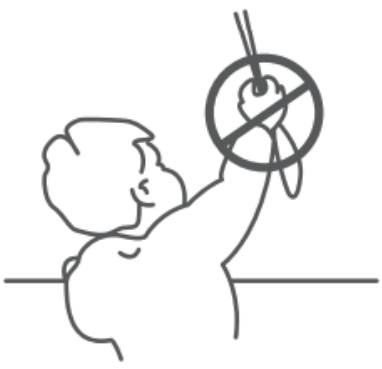

child safe

make it safe™

BBSA BRITISH BLIND & SHUTTER ASSOCIATION

LOUVRE BLIND TROUBLESHOOTING 1/2

WHEN I PULL THE CONTROL CHAIN THE LOUVRES WON'T TURN

STEP 1

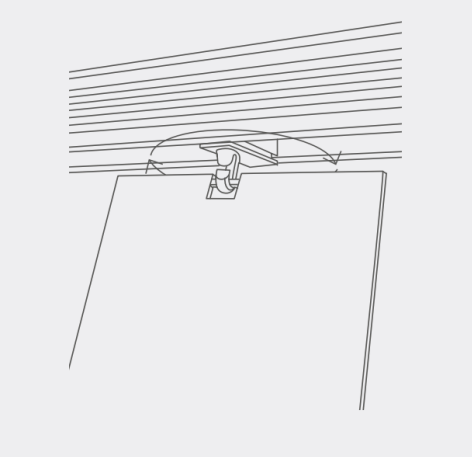

Louvres are jammed/not rotating.

STEP 2

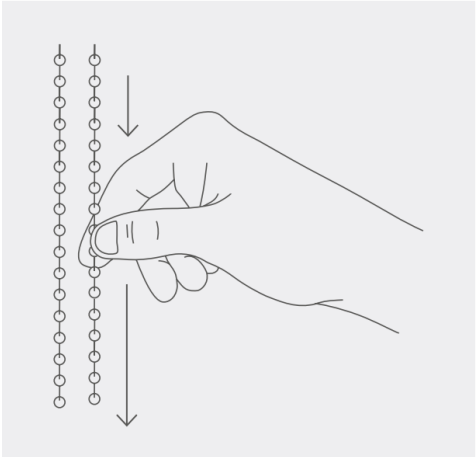

Pull the control chain.

STEP 3

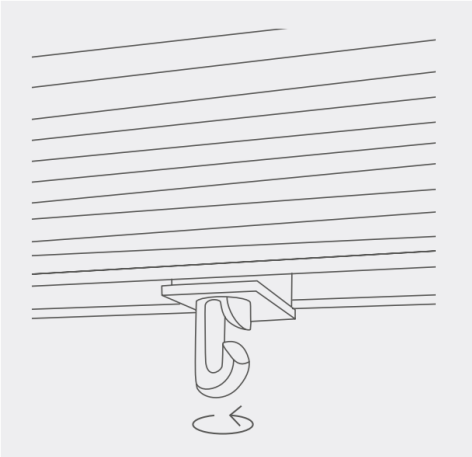

Do runners rotate normally? If yes, return the runners to the open position and add the louvres.

Pegs should be turned perpendicular to the headrail.

STEP 4

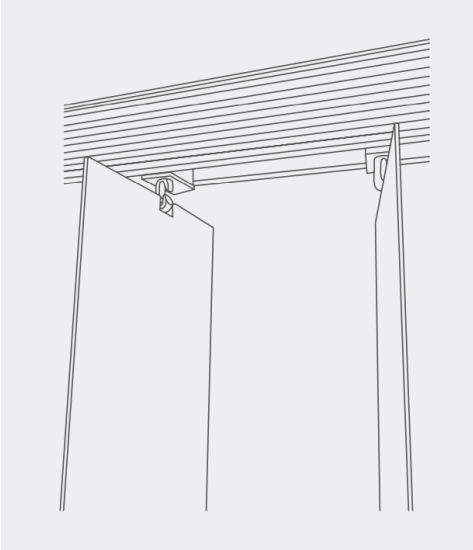

Add the louvres.

STEP 5

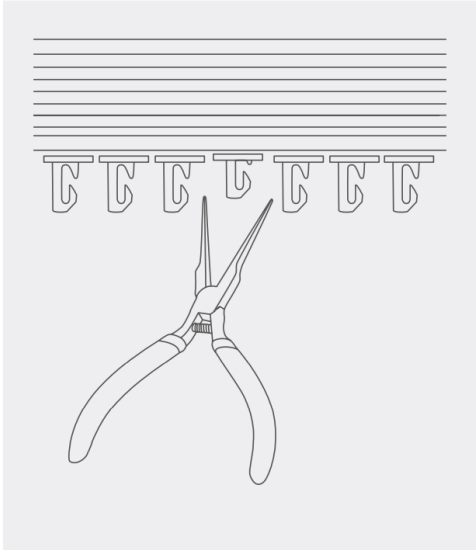

If not, check if any of the pegs within the headrail have been pushed in, if they have, using a pair of pliers, gently pull the pegs back out.

STEP 6

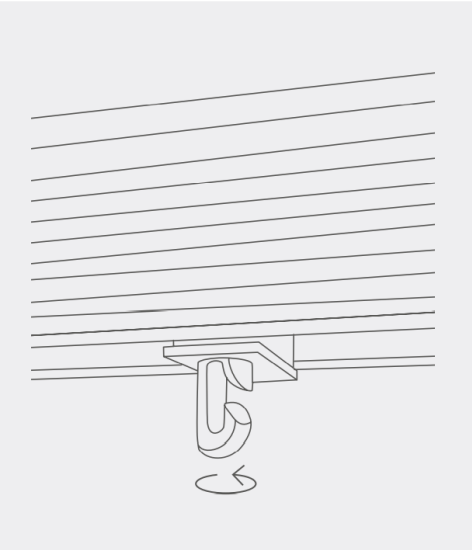

Do the pegs now rotate normally? If yes, repeat point 3.

LOUVRE BLIND TROUBLESHOOTING 2/2

TRAVELLERS NOT ALIGNED

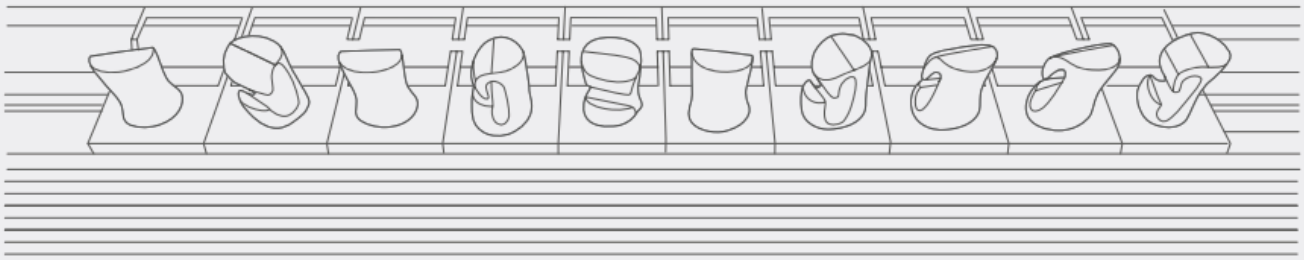

STEP 1

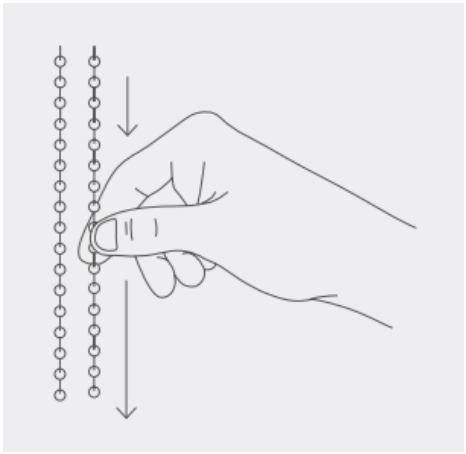

Pull on chain until completely restricted.

STEP 2

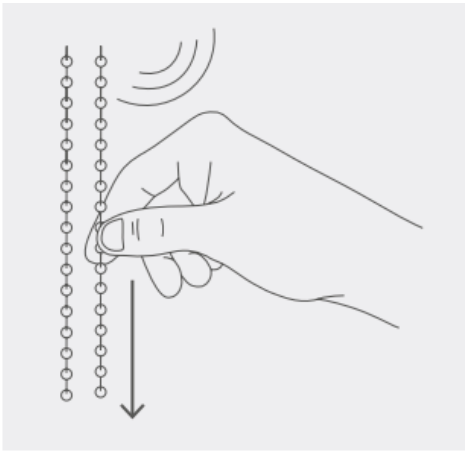

At this point you will need to pull on the chain with force. You will hear a grinding noise - this is normal.

STEP 3



Travellers should start to align.

STEP 4

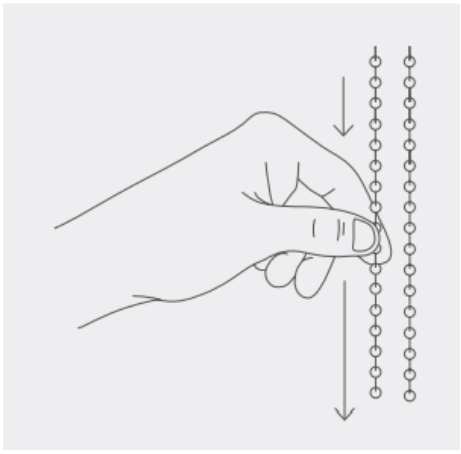

Repeat step 2 pulling chain in the opposite direction until travellers are fully aligned.

STEP 5

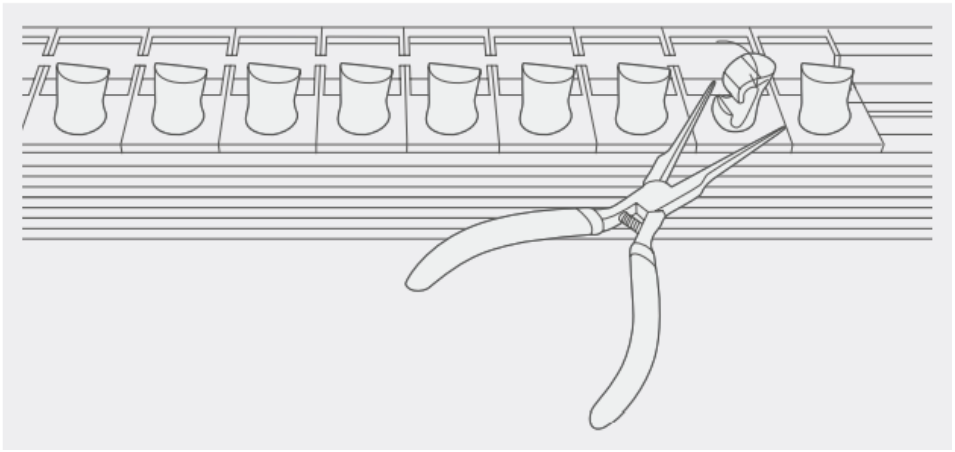

Did this align all the pegs? If not, gently rotate the lazy traveller with a pair of pliers. The traveller will then click into place accordingly.